LOOM & LAST

How to measure for Roman blinds

Use a metal tape measure for accuracy. Measurements should be in cm to the nearest 0.5cm. Double check your measurements.

	Window name	Width (W)	Drop (D)		
Dimensions		cm	cm	**Installation height**	cm

Control	Cord / Sidewinder	Left / Right

1 Where do you want to hang your blind?

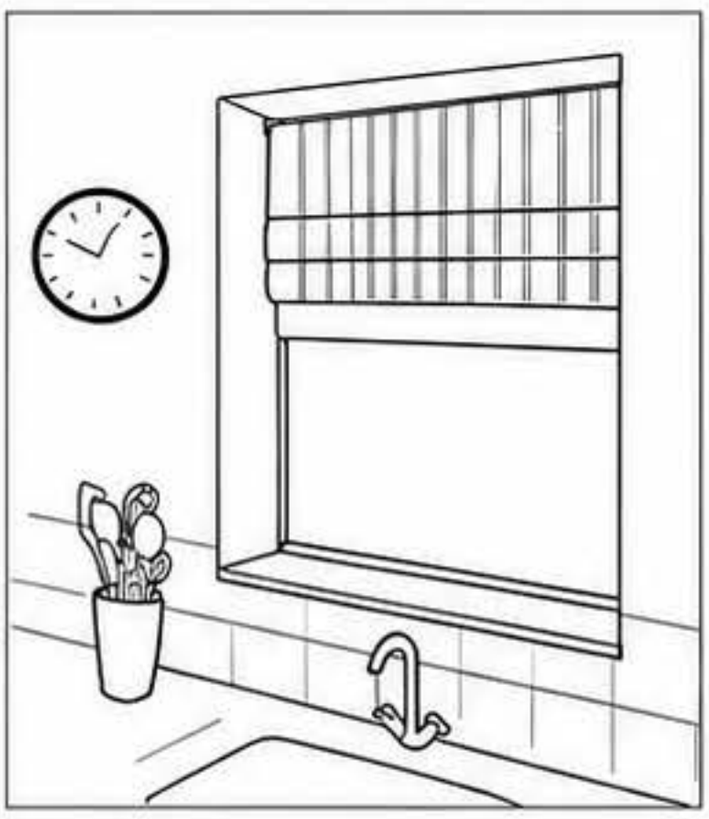

A - Inside recess



B - Outside recess



C - Fixed to wooden window architrave

2 Measure your window

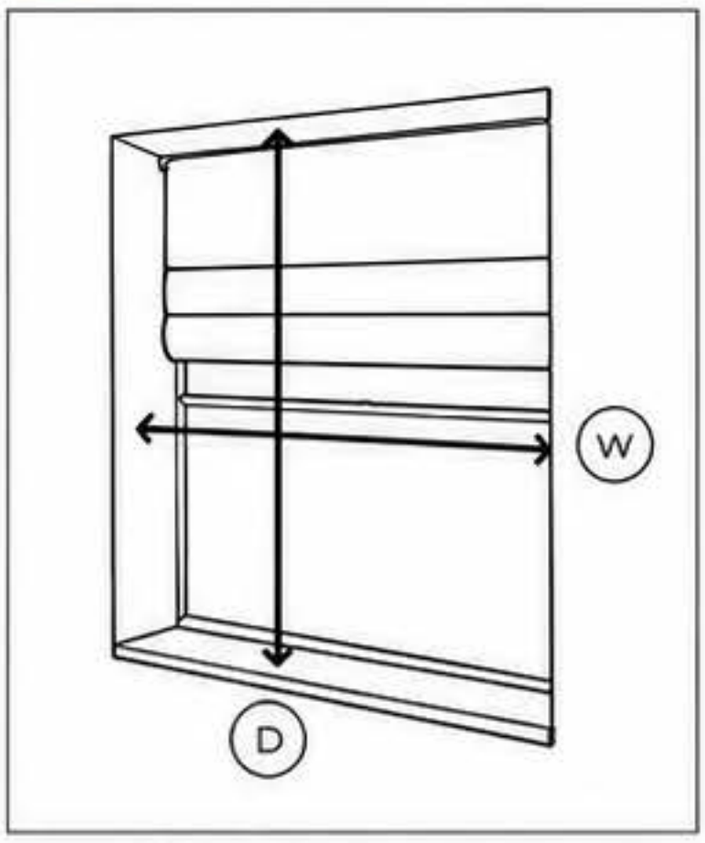

A - Inside recess

Wonky frames or Victorian windows? Measure the width at the narrowest point to ensure that the blind can move up and down freely.

We make your blinds to the exact width specified.

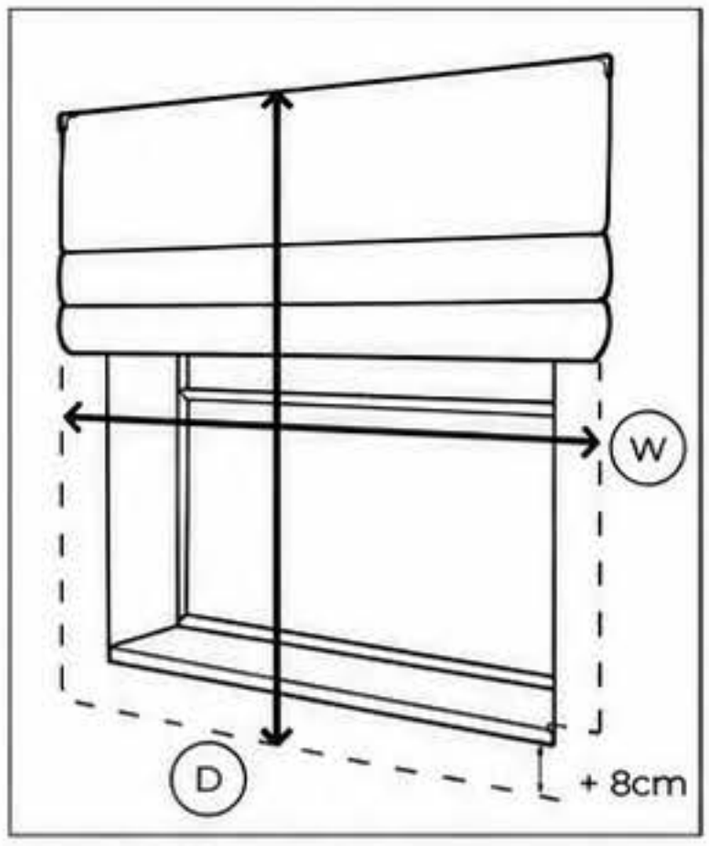

B - Outside recess

We recommend at least 8cm overlap outside the frame, particularly if you have a blackout blind and are concerned about light leakage.

Check for any obstructions that may stop your blinds hanging freely.

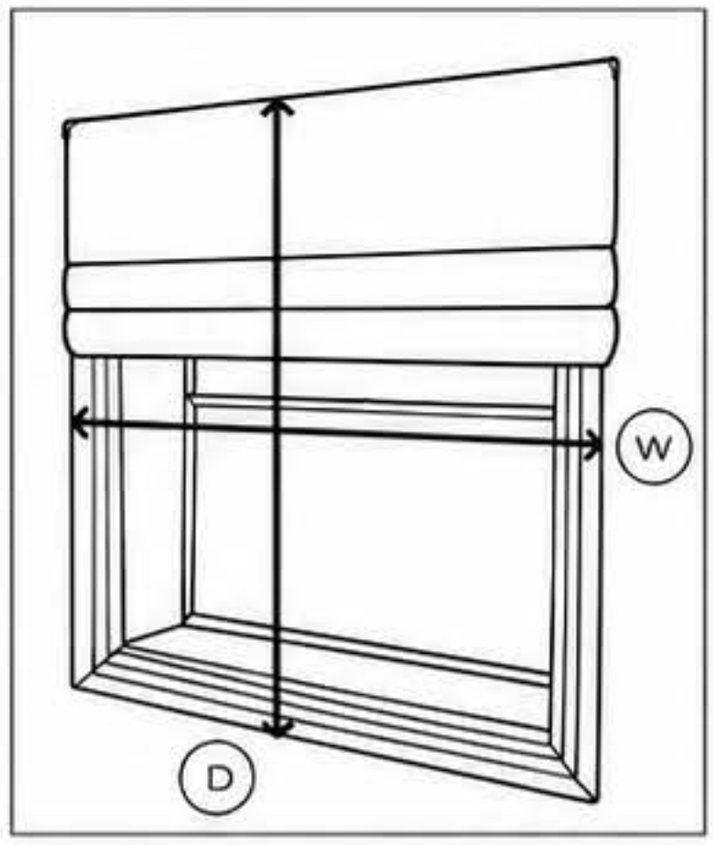

C - Fixed to wooden window architrave

Check for any obstructions that might stop your blind hanging freely.

3 Which control would you like, on which side?

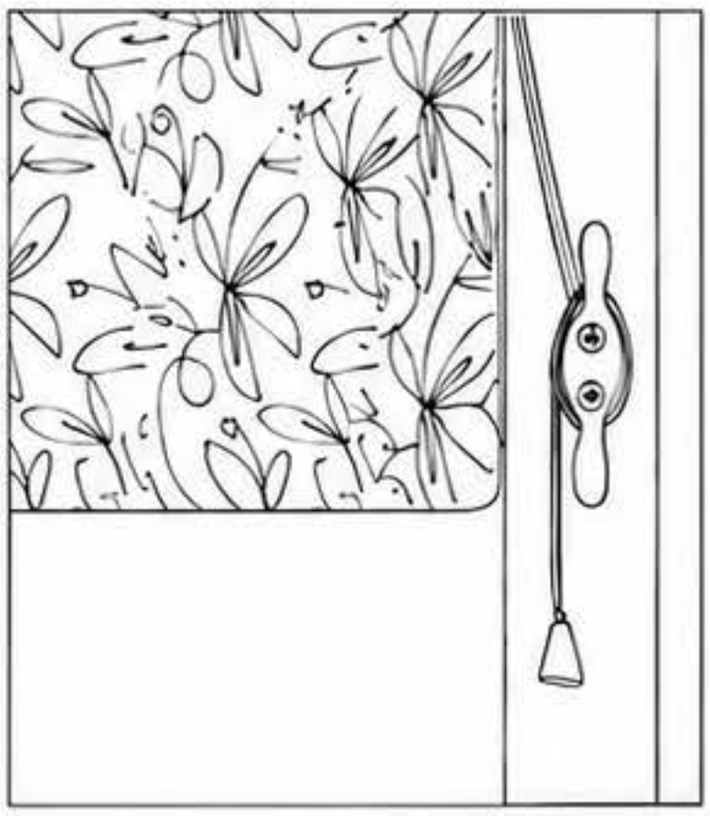

Cord and cleat

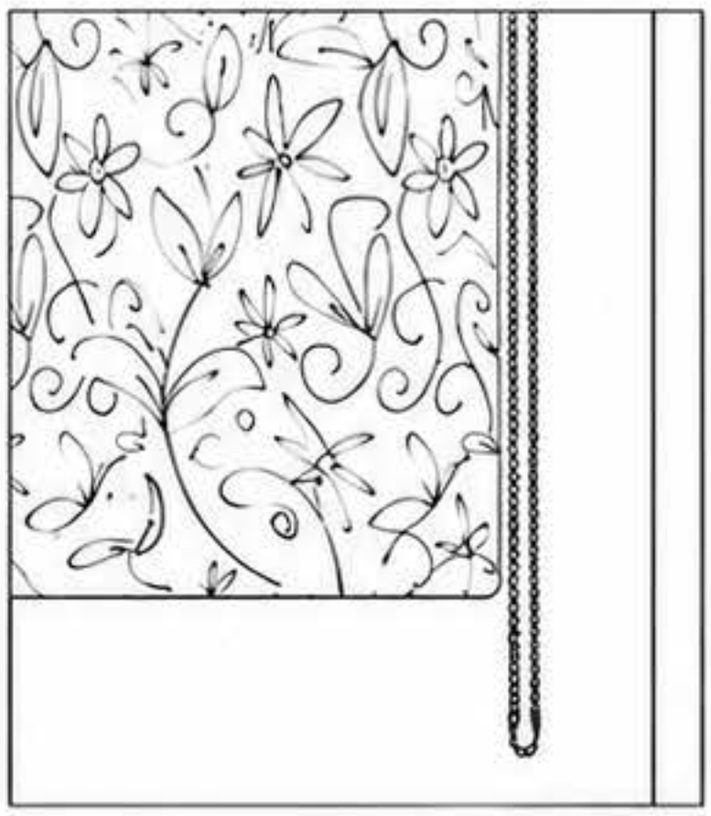

Sidewinder (metal chain)



Right side



Left side

4 Installation height

To comply with child safety legislation we require your installation height (H) to ensure your chain is a safe distance (at least 60cm) from the floor.

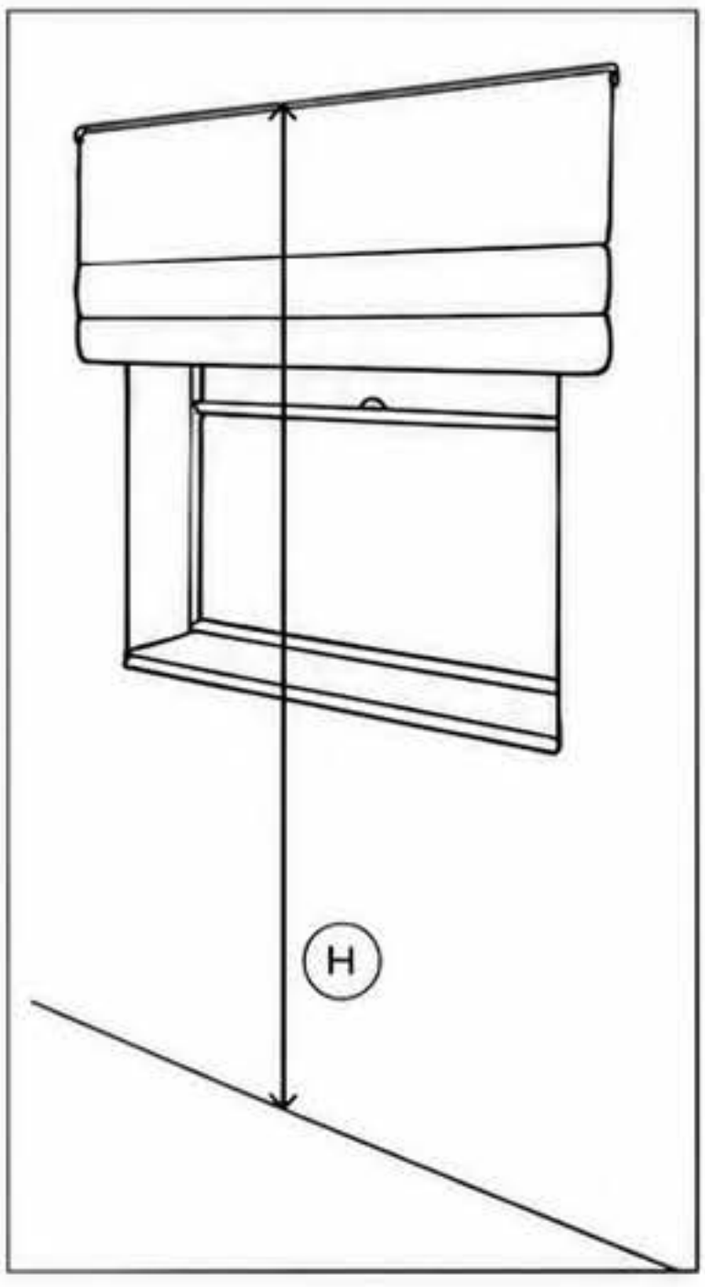

MAKE IT SAFE!

Read the child safety leeflet included with this product to ensure your bind is safety installed

Order online or call 0800 121 6370

Loom & Last Ltd. (c) 2019
www.koomandlast.com